▲ Specify Finish

# Product Parts Breakdown

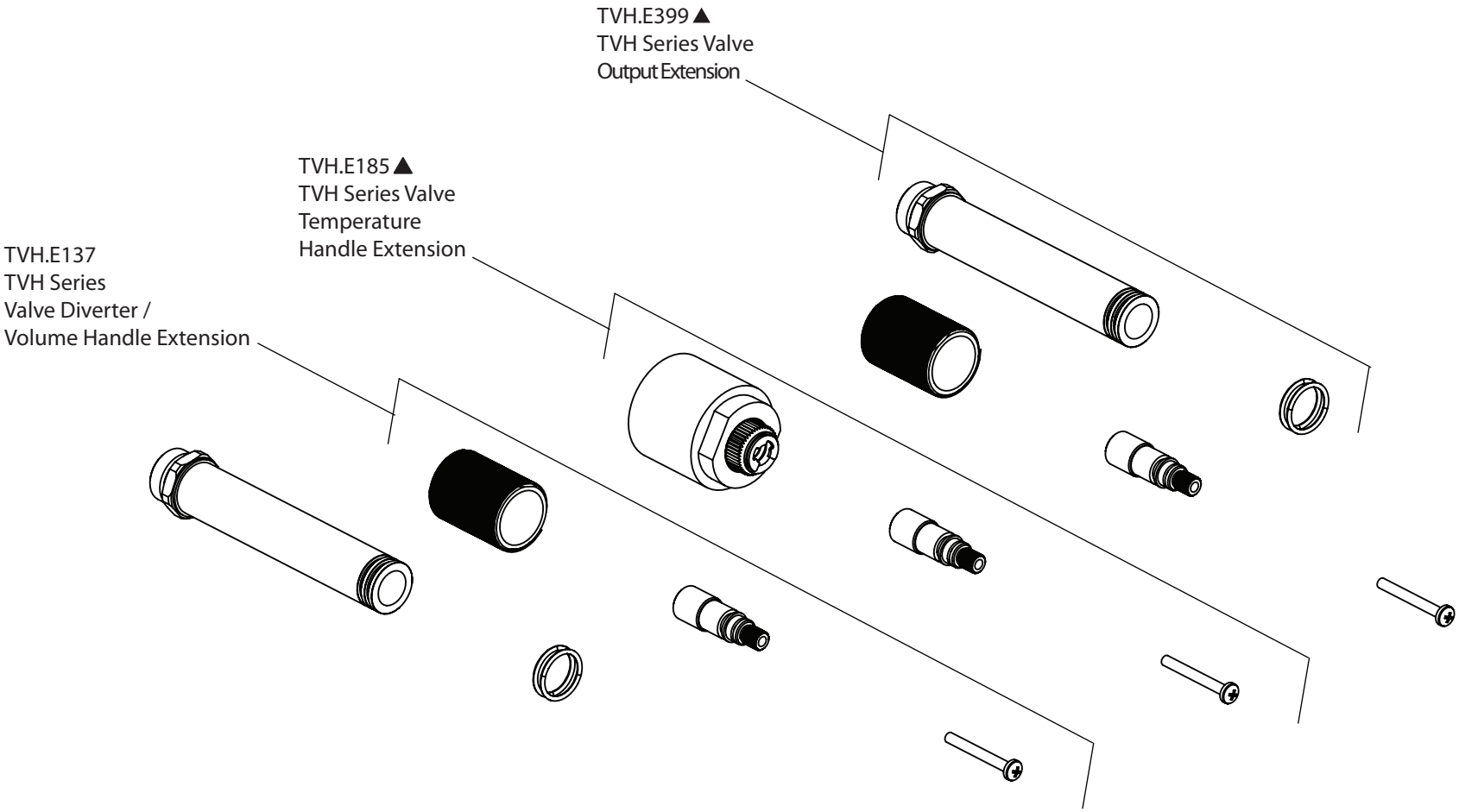


isenberg
innovation+design

TVH.2691E

Ver 2.53